Detention Furniture
Steel Bench
Model: S-B29-C

PART 1 GENERAL

1.01 **Description**

The contoured benches shown on the plans and herein specified are the products of Kane Innovations, Erie, Pennsylvania. This manufacturer's name and products have been used to establish the standards of construction and quality of workmanship required for this project. Manufacturers bidding on this project must be actively engaged in the fabrication of specified items for a minimum of five (5) years prior to the bid date. Manufacturers requesting approval to bid their products as equal must submit to the Architect full-size drawings, including details of construction, and a complete contoured bench sample, ten (10) days prior to the bid date.

1.02 **Submittals**

A. Manufacturer shall submit shop drawings, showing details of attachment to surround materials and elevations showing scope of the project.
B. Samples of materials as may be requested without cost to owner; frame sections, etc.

1.03 **Warranty**

The contoured bench supplied by Kane Innovations on the designated project is warranted for one (1) year against any proven defective material or parts, as called for in the specifications and approved shop drawings. This warranty does not cover abuse by others.

PART 2 PRODUCTS

2.01 **Acceptable Manufacturers**

Kane Innovations, Erie, PA
☎ (800) 773-2439

2.02 **Material**

A. Contoured bench shall be formed of 12-gauge steel.
B. End plates shall be made of 12-gauge steel.
C. Intermediate supports shall be made of 12-gauge steel.

2.03 **Mounting Angles**

Mounting angles shall be 3" [76.2] x 2" [50.8] x ¼" [6.35] structural steel angles which are continuous at floor and wall the length of each bench.

2.04 **Finish**

A. All interior and exterior surfaces of the bench and mounting angles shall be thoroughly cleaned in a 5-step bonderizing process. The surfaces shall receive an electrostatically applied thermoplastic, polyester powder coating which shall be baked to a hard mar-resistant finish in Kane's standard gray.

2.05 Fabrication

A. The bench shall be formed to contoured shape as shown on the contract drawing. End plates shall be continuously welded along contour and dressed smooth. Intermediate supports shall be located at 48" [1219.2] intervals and shall be stitch welded to back side of the bench.
B. Sound deadening insulation shall be applied to the inside cavity of the bench. Sound deadening insulation does not completely fill the benches. Additional insulation, if required, is to be provided and installed by others.

2.06 **Hardware**

A. Each bench shall have all necessary installation hardware, including security head fastening screws.
B. Each bench shall come fully assembled and tested from the factory.

PART 3 EXECUTION

3.01 **Inspection**

Verify that openings fit allowable tolerances are plumb, level, provide a solid anchoring surface and comply with approved shop drawings.

PART 4 ENVIROMENTAL REPORTING

4.01 **LEED Materials and Resources**

A. Recycled Content: This product contributes toward satisfying Credit 4 under LEED.
B Regional Material: This product can contribute toward satisfying Credit 5 under LEED.

BENCH SCHEDULE

ROOM #	QTY:	BENCH LENGTH
****	1	**"
****	1	**"

BENCH CAVITY PARTIALLY FILLED WITH SOUND DEADENING INSULATION. REMAINING PORTION OF INSULATION TO BE SUPPLIED BY INSTALLER AND INSTALLED DURING THE BENCH INSTALLATION.

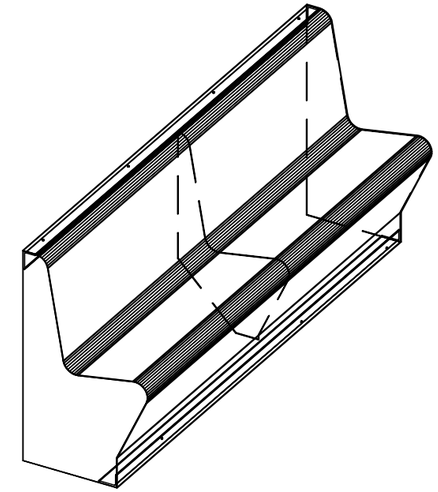

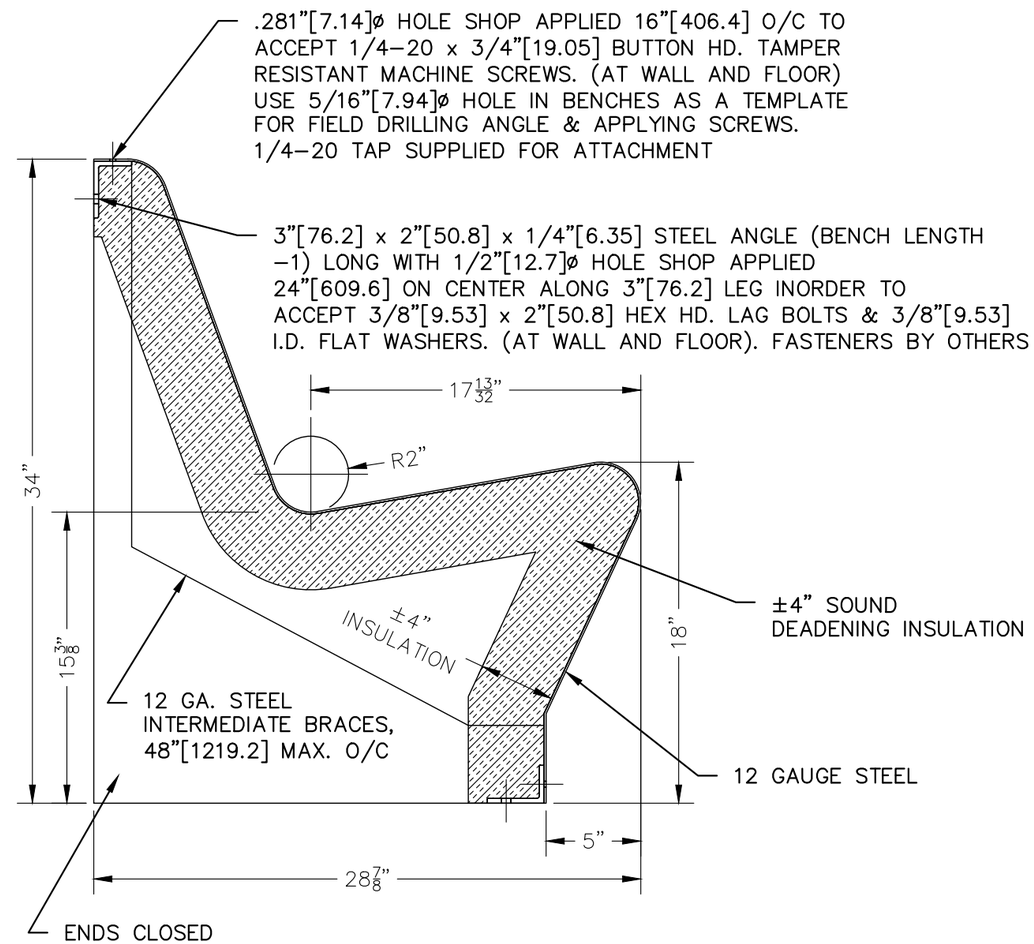

REVISION LOG

REV	BY	DATE	DESCRIPTION

INFORMATION SHOWN ON THIS DRAWING IS PROPRIETARY AND THE SOLE PROPERTY OF KANE INNOVATIONS CORPORATION, AND IS NOT TO BE REPRODUCED, DISCLOSED, OR TRANSMITTED TO OTHERS FOR ANY PURPOSE NOT AUTHORIZED BY KANE INNOVATIONS CORPORATION.

KANE INNOVATIONS
GUARDIANS OF SAFE ENVIRONMENTS
KANE DETENTION PROTECTION BY KANE
2250 POWELL AVE.
ERIE, PENNSYLVANIA 16506
PH: (800) 773-2439 FAX: (814) 772-9200
www.kaneinnovations.com

© 2021

S-B29-C
DETENTION BENCH
STEEL

PROJECT
PROJECT NO.
DRAWN
DATE 09/15/2014
SCALE 1-1/2" = 1' - 0"
SHEET D1